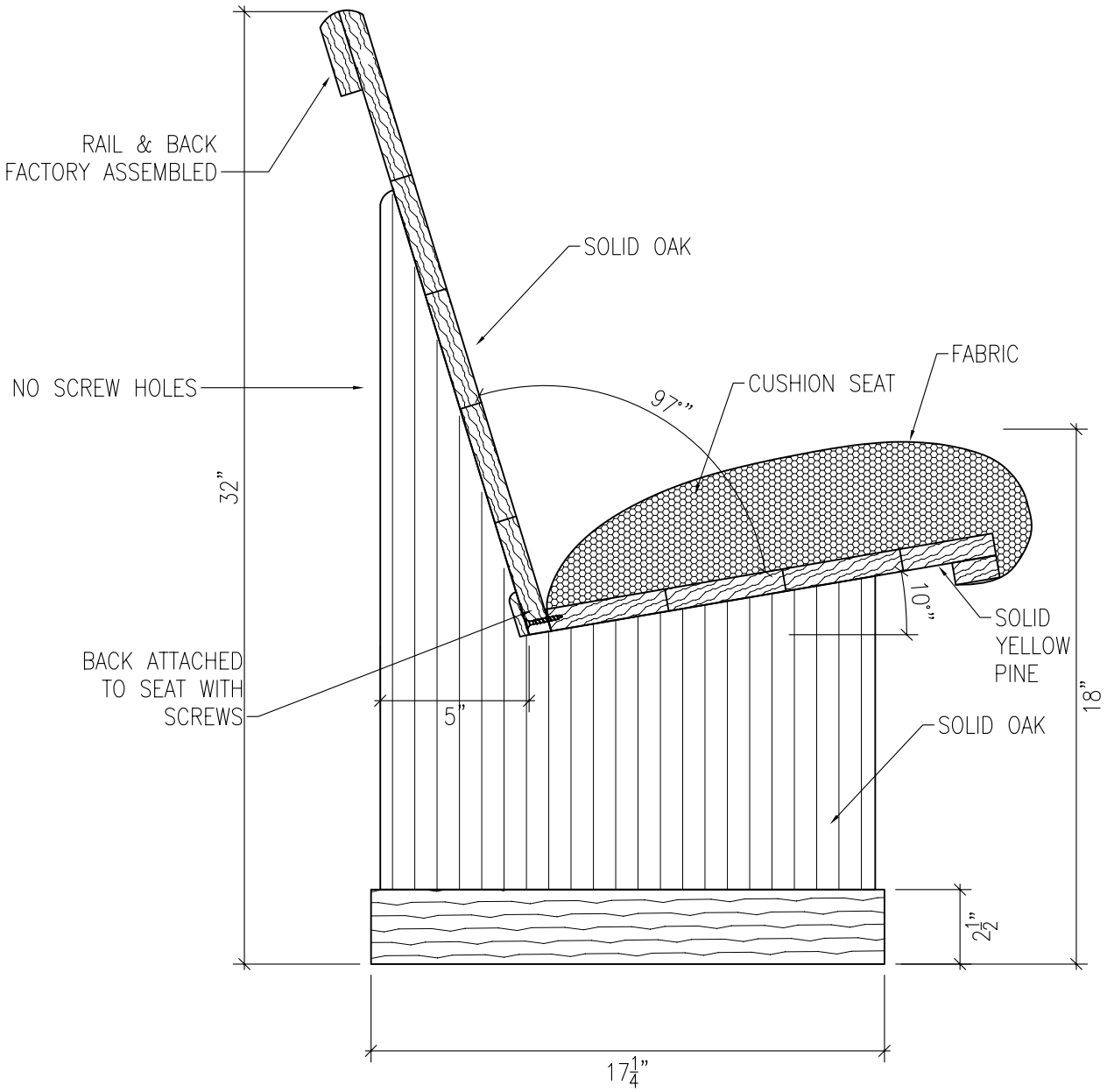

1/B VERTICAL SECTION MODEL "B"
SCALE: 2" =1'-0"

DUMAS

Makers of Solid Wood Church and Courthouse Furniture Since 1928
P.O. Box 429
114 Grove Hill Ave.
Grove Hill, AL.36451
1-800-633-6896
Email: dumas@tds.net

Approved by_____
Date:_____

DWG NO.1B	MODEL B BODY STYLE	
SCALE: 2"=1'-0"	MATERIAL=SOLID OAK	REV